CMC ELECTRIC

NEFF
COOKING PASSION SINCE 1877

N 90
I91VT44N0 STAINLESS STEEL
I91VT44N0
HOB EXTRACTOR
IVT9144NMC
11 CM WIDE

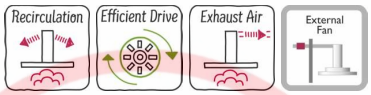

Optional accessories

Z5290X0	Recirculation module
Z52VA10X0	Gas deflector

This hob extractor offers more flexibility and a clear view while cooking thanks to its space-saving installation in the countertop

- √ Maximum flexibility - Thanks to various options forcombining with Domino and electric hobs
- √ High Extraction Rate – ensures a clear view while cooking thanks to an efficient motor technology
- √ Reduced Noise - Our optimized motor guarantees a quiet cooking experience
- √ Space-saving Installation – room for pull-out drawers thanks to an installation of the extractor duct in a lower cabinet
- √ Grease Filter Performance - Filters the grease right where it originates - at the hob

Features

Technical Data

Approval certificates : CE, G-Mark
Length electrical supply cord (cm) : 130
Required niche size for installation (HxWxD) : 900-1050mm x 551mm x 500mm
Net weight (kg) : 13.770
Type of control : Electronic
Maximum output air extraction (m3/h) : 540
Boost position output recirculating (m3/h) : 480
Maximum output recirculating air (m3/h) : 430
Boost position air extraction (m^3/h) : 600
Noise level (dB) : 67
Diameter of air outlet (mm) : 150
Grease filter material : Washable stainless steel
Odour filter : No
Operating Mode : Convertible
Delay Shut off modes : 15M
Optional accessories : Z5290X0, Z52VA10X0
Grease filter type : Kassette
Connection Rating (W) : 145
Current (A) : 16
Voltage (V) : 220-240
Frequency (Hz) : 50
Plug type : Gardy plug w/ earthing
Installation typology : Built-in
Material body : Glass, Stainless steel
Approval certificates : CE, G-Mark
Plug type : Gardy plug w/ earthing
Dimensions of the product, with chimney (if exists) (in) : / x x
Dimensions of the packed product (in) : 20.94 x 28.74 x 30.31
Net weight (lbs) : 30
Gross weight (lbs) : 53
Motor location : External motor
No-return airflow flap : No
Length electrical supply cord (cm) : 130
Dimensions of the product, with chimney (if exists) (mm) : 900 - 1050 x 110 x 546
Dimensions of the packed product (HxWxD) (mm) : 532 x 730 x 770
Net weight (kg) : 13.770
Gross weight (kg) : 24.0

4 242004 210511

1 Mesogis Avenue 8280, Paphos, Cyprus Tel: +357 26222444 Fax: +35726933677
URL: httpp://www.cmcelectric.com Email: info@cmcelectric.com

N 90
191VT44N0 STAINLESS STEEL
191VT44N0
HOB EXTRACTOR
IVT9144NMC
11 CM WIDE

Features

- Energy Efficiency Class: A+ (at a range of energy efficiency classes from A++ to E)
- Average Energy Consumption: 37.4 kWh/year
- Blower Efficiency Class: A*
- Grease Filtering Efficiency Class: C
- Noise min./max. Normal Level: 62/67 dB
- Appliance colour: stainless steel
- For installation in a floor unit / socket.
- Suitable for ducted or re-circulated extraction
- The Combination of Domino gas hobs with wok burner configuration is not allowed!
- For recirculated extraction a recirculation module is required.
- Electronic control for maximum performance
- Electronic controls via TouchControl with 7-segment display
- 3 speeds plus intensive setting
- Automatic revert setting
- Automatic 15 min after running
- Efficient BLDC-technology
- Extraction rate according to EN 61591 ø 15 cm:
  max. Normal use 540 m^3/h
  Intensive 600 m^3/h
- Noise level according to EN 60704-3 und EN 60704-2-13 exhaust air:
  Max. normal use: 67 dB(A) re 1 pW sound pressure:53 dB(A)
  Intensive: 70 dB(A) re 1 pW (56 dB(A) re 20 µPa sound pressure)
- Extraction rate in recirculation mode:
  Max. normal use: 430 m^3/h
  Intensive: 480 m^3/h
- Noise levels in recirculation mode:
  Max. normal use: 71 dB(A) re 1 pW (57 dB(A) re 20 µPa sound pressure)
  Intensive: 73 dB(A) re 1 pW (59 dB(A) re 20 µPa sound pressure)
- Metal grease filter, dishwasher safe
- Saturation indicator for metal and charcoal filter
- Dimensions (WxD): 110 x 546 mm
- Immersion depth: 156 mm
- Measurements and built-in instructions according to our technical drawings.
- Electrical cable lenght 1.3 m
- Power rating: 145 W

1 Mesogis Avenue 8280, Paphos, Cyprus Tel: +357 26222444 Fax: +35726933677
URL: httpp://www.cmcelectric.com Email: info@cmcelectric.com

N 90
191VT44N0 STAINLESS STEEL
191VT44N0
HOB EXTRACTOR
IVT9144NMC
11 CM WIDE

Dimensioned drawings

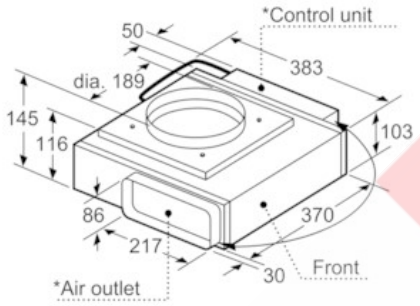

* The air outlet and control unit can be swapped with one another
If required, the control unit can be secured to the kitchen unit wall

measurements in mm

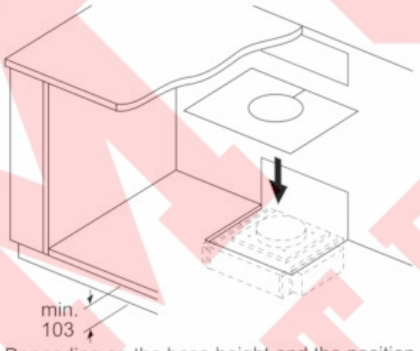

Depending on the base height and the position of the ventilator, an appropriate cut-out may be required in the floor of the kitchen unit.

measurements in mm

View of the control unit

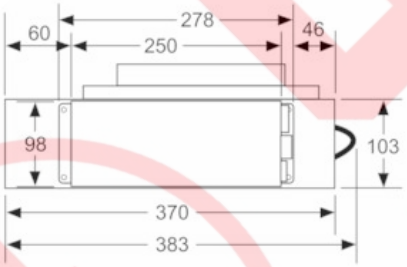

measurements in mm

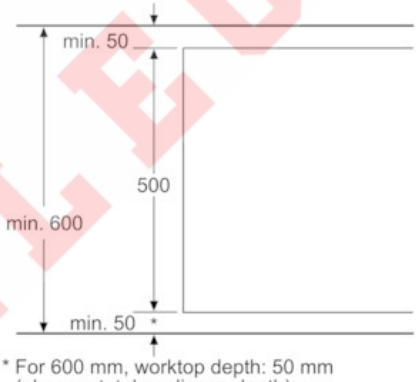

* For 600 mm, worktop depth: 50 mm (observe total appliance depth)

measurements in mm

View of the air outlet

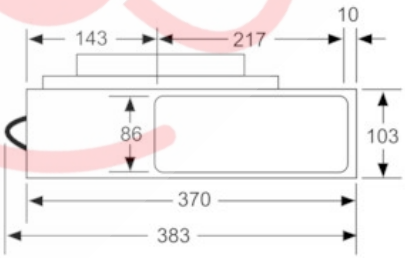

measurements in mm

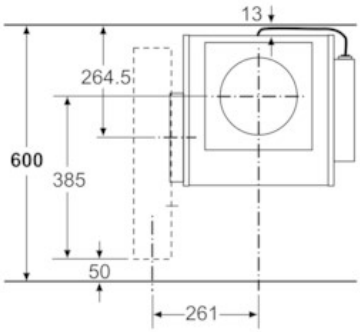

measurements in mm

1 Mesogis Avenue 8280, Paphos, Cyprus Tel: +357 26222444 Fax: +35726933677
URL: httpp://www.cmcelectric.com Email: info@cmcelectric.com

N 90
191VT44N0 STAINLESS STEEL
191VT44N0
HOB EXTRACTOR
IVT9144NMC
11 CM WIDE

Dimensioned drawings

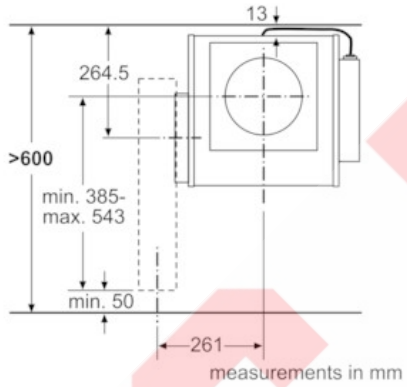

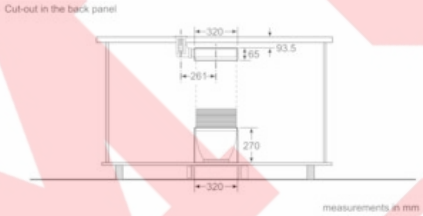

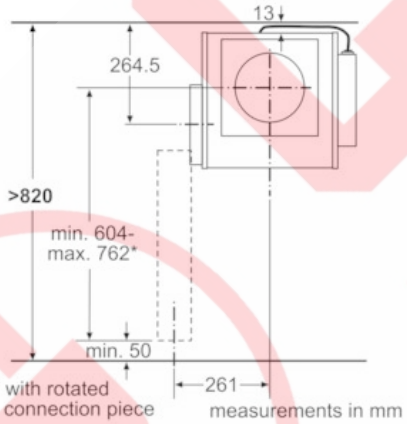

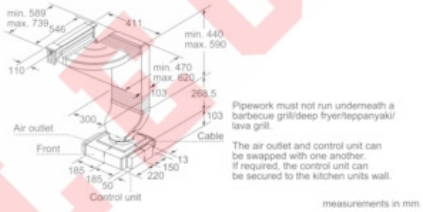

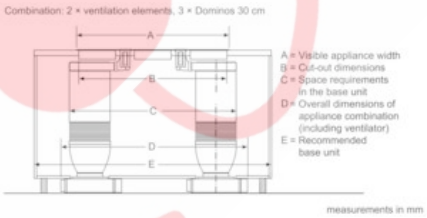

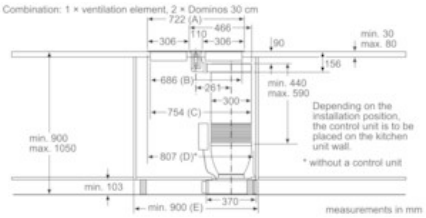

1 Mesogis Avenue 8280, Paphos, Cyprus Tel: +357 26222444 Fax: +35726933677
URL: httpp://www.cmcelectric.com Email: info@cmcelectric.com

N 90

191VT44N0 STAINLESS STEEL

191VT44N0

HOB EXTRACTOR

IVT9144NMC

11 CM WIDE

Dimensioned drawings

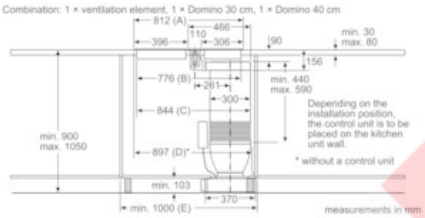

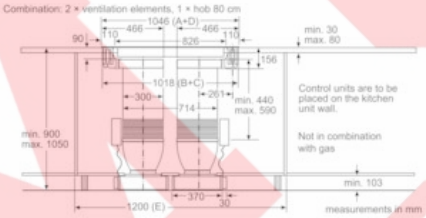

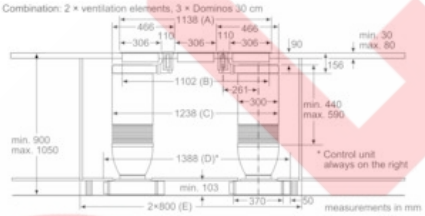

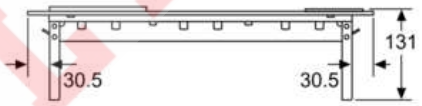

measurements in mm

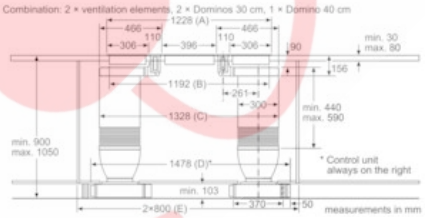

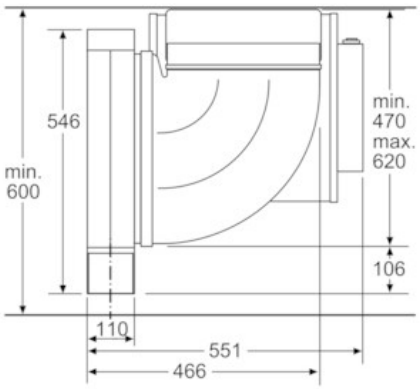

measurements in mm

1 Mesogis Avenue 8280, Paphos, Cyprus Tel: +357 26222444 Fax: +35726933677
URL: httpp://www.cmcelectric.com Email: info@cmcelectric.com

N 90

191VT44N0 STAINLESS STEEL

191VT44N0

HOB EXTRACTOR

IVT9144NMC

11 CM WIDE

Dimensioned drawings

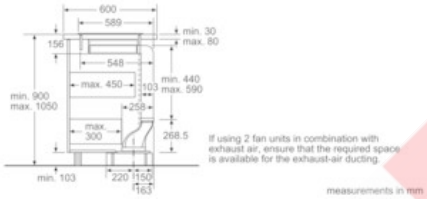

Combination options with corresponding appliance and cut-out dimensions

Width type: (cm) 11 | 30 | 40 | 80

Appliance width: (mm) 110 | 306 | 396 | 826

Ventilation element	Direction of pipework for the ventilation element		Hob/Domino	A	B	C	D	E
1x11	left or right		2x30	722	686	754	max. 857*	min. 900
1x11	left or right		1x30, 1x40**	812	776	844	max. 947*	min. 1000
	1	2						
2x11	left	right	3x30	1138	1102	1238	max. 1408*	2x800
			2x30, 1x40**	1228	1192	1328	max. 1498*	2x800
2x11	left	right						
2x11	right	left	1x80***	1046	1018	1018	max. 1046	1200

* Dimensions may be smaller if the control unit is moved
** Pipework must not run underneath a barbecue grill/deep fryer/teppanyaki/lava grill.
*** Control units must be placed on the kitchen unit wall.

measurements in mm

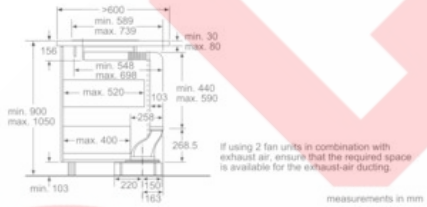

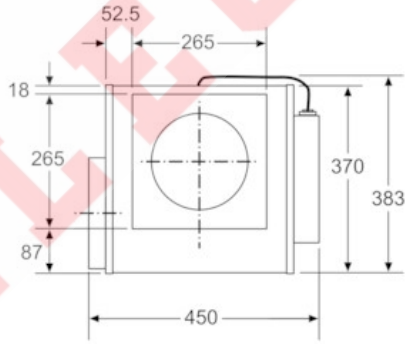

measurements in mm

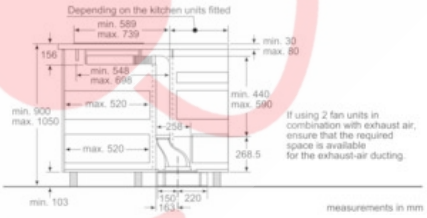

1 Mesogis Avenue 8280, Paphos, Cyprus Tel: +357 26222444 Fax: +35726933677
URL: httpp://www.cmcelectric.com Email: info@cmcelectric.com